ADuC834

MicroConverter® Quick Reference Guide

a "Data Acquisition System on a Chip"

the ADuC834 is:

ADC: 24bit ΣΔ with programmable gain, plus 16bit ΣΔ auxiliary ADC

DAC: 12bit, 15µs, voltage output, rail-to-rail <1LSB DNL

EEPROM: 62K bytes Flash/EE code memory
4K bytes Flash/EE data memory

microcontroller: industry standard 8052
32 I/O lines, programmable PLL clock (98KHz to 12.58MHz from 32KHz crystal)

other on-chip features: calibrated temperature sensor, power supply monitor, watchdog timer, flexible serial interface ports, voltage reference, time interval counter, dual 8/16bit PWM, power-on-reset

FUNCTIONAL BLOCK DIAGRAM

* pin numbers below refer to MQFP package

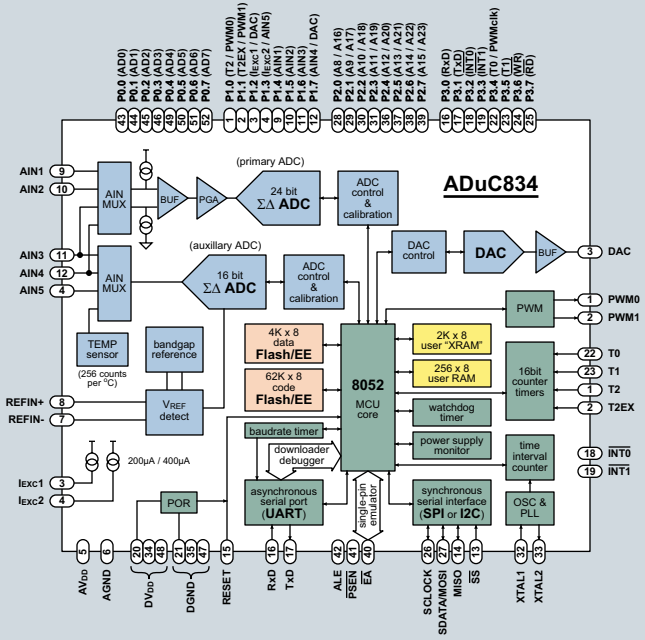

www.analog.com/microconverter REV. 0

INSTRUCTION SET

Arithmetic Operations

		bytes	OSC periods
ADD A,source	add source to A	1,2	12
ADD A,#data		2	12
ADDC A,source	add with carry	1,2	12
ADDC A,#data		2	12
SUBB A,source	subtract from A with borrow	1,2	12
SUBB A,#data		2	12
INC A	increment	1	12
INC source		1,2	12
INC DPTR *		1	24
DEC A	decrement	1	12
DEC source		1,2	12
MUL AB	multiply A by B	1	48
DIV AB	divide A by B	1	48
DA A	decimal adjust	1	12

Legend

Rn	register addressing using R0-R7
direct	8bit internal address (00h-FFh)
@Ri	indirect addressing using R0 or R1
source	any of [Rn, direct, @Ri]
dest	any of [Rn, direct, @Ri]
#data	8bit constant included in instruction
#data16	16bit constant included in instruction
bit	8bit direct address of bit
rel	signed 8bit offset
addr11	11bit address in current 2K page
addr16	16bit address

* INC DPTR increments the 24bit value DPP/DPH/DPL

Data Transfer Operations

		bytes	OSC periods
MOV A,source	move source to destination	1,2	12
MOV A,#data		2	12
MOV dest,A		1,2	12
MOV dest,source		1,2,3	24
MOV dest,#data		2,3	12,24
MOV DPTR,#data16		3	24
MOVC A,@A+DPTR	move from code memory	1	24
MOVC A,@A+PC		1	24
MOVX A,@Ri	move to/from data memory	1	24
MOVX A,@DPTR		1	24
MOVX @Ri,A		1	24
MOVX @DPTR,A		1	24
PUSH direct	push onto stack	2	24
POP direct	pop from stack	2	24
XCH A,source	exchange bytes	1,2	12
XCHD A,@Ri	exchg low digits	1	12

Logical Operations

		bytes	OSC periods
ANL A,source	logical AND	1,2	12
ANL A,#data		2	12
ANL direct,A		2	12
ANL direct,#data		3	24
ORL A,source	logical OR	1,2	12
ORL A,#data		2	12
ORL direct,A		2	12
ORL direct,#data		3	24
XRL A,source	logical XOR	1,2	12
XRL A,#data		2	12
XRL direct,A		2	12
XRL direct,#data		3	24
CLR A	clear A to zero	1	12
CPL A	complement A	1	12
RL A	rotate A left	1	12
RLC A	...through C	1	12
RR A	rotate A right	1	12
RRC A	...through C	1	12
SWAP A	swap nibbles	1	12

Program Branching

		bytes	OSC periods
ACALL addr11	call subroutine	2	24
LCALL addr16		3	24
RET	return from sub.	1	24
RETI	return from int.	1	24
AJMP addr11	jump	2	24
LJMP addr16		3	24
SJMP rel		2	24
JMP @A+DPTR		1	24
JZ rel	jump if A = 0	2	24
JNZ rel	jump if A not 0	2	24
CJNE A,direct,rel	compare and jump if not equal	3	24
CJNE A,#data,rel		3	24
CJNE Rn,#data,rel		3	24
CJNE @Ri,#data,rel		3	24
DJNZ Rn,rel	decrement and jump if not zero	2	24
DJNZ direct, rel		3	24
NOP	no operation	1	12

Boolean Variable Manipulation

		bytes	OSC periods
CLR C	clear bit to zero	1	12
CLR bit		2	12
SETB C	set bit to one	1	12
SETB bit		2	12
CPL C	complement bit	1	12
CPL bit		2	12
ANL C,bit	AND bit with C	2	24
ANL C,/bit	...NOTbit with C	2	24
ORL C,bit	OR bit with C	2	24
ORL C,/bit	...NOTbit with C	2	24
MOV C,bit	move bit to bit	2	12
MOV bit,C		2	24
JC rel	jump if C set	2	24
JNC rel	jmp if C not set	2	24
JB bit,rel	jump if bit set	3	24
JNB bit,rel	jmp if bit not set	3	24
JBC bit, rel	jmp&clear if set	3	24

ASSEMBLER DIRECTIVES

EQU	define symbol	DW	store word values in program memory
DATA	define internal memory symbol	ORG	set segment location counter
IDATA	define indirect addressing symbol	END	end of assembly source file
XDATA	define external memory symbol	CSEG	select program memory space
BIT	define internal bit memory symbol	XSEG	select external data memory space
CODE	define program memory symbol	DSEG	select internal data memory space
DS	reserve bytes of data memory	ISEG	select indirectly addressed internal data memory space
DBIT	reserve bits of bit memory		
DB	store byte values in program memory	BSEG	select bit addressable memory space

PIN FUNCTIONS

MQFP	CSP	
1	56	P1.0 / T2 / PWM0
2	1	P1.1 / T2EX / PWM1
3	2	P1.2 / IEXC1 / DAC
4	3	P1.3 / IEXC2 / AIN5
5	4,5	AVDD
6	6,7,8	AGND
7	9	REFIN-
8	10	REFIN+
9	11	P1.4 / AIN1
10	12	P1.5 / AIN2
11	13	P1.6 / AIN3
12	14	P1.7 / AIN4 / DAC
13	15	SS
14	16	MISO
15	17	RESET
16	18	P3.0 / RxD
17	19	P3.1 / TxD
18	20	P3.2 / INT0
19	21	P3.3 / INT1
20	22	DVDD
21	23	DGND
22	24	P3.4 / T0 / PWMclk
23	25	P3.5 / T1
24	26	P3.6 / WR
25	27	P3.7 / RD
26	28	SCLOCK

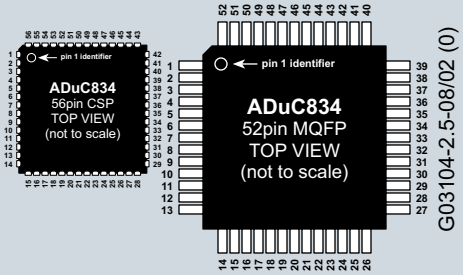

MQFP	CSP	
27	29	SDATA / MOSI
28	30	P2.0 / A8 / A16
29	31	P2.1 / A9 / A17
30	32	P2.2 / A10 / A18
31	33	P2.3 / A11 / A19
32	34	XTAL1 (in)
33	35	XTAL2 (out)
34	36	DVDD
35	37,38	DGND
36	39	P2.4 / A12 / A20
37	40	P2.5 / A13 / A21
38	41	P2.6 / A14 / A22
39	42	P2.7 / A15 / A23

MQFP	CSP	
40	43	EA
41	44	PSEN
42	45	ALE
43	46	P0.0 / AD0
44	47	P0.1 / AD1
45	48	P0.2 / AD2
46	49	P0.3 / AD3
47	50	DGND
48	51	DVDD
49	52	P0.4 / AD4
50	53	P0.5 / AD5
51	54	P0.6 / AD6
52	55	P0.7 / AD7

CODE MEMORY SPACE

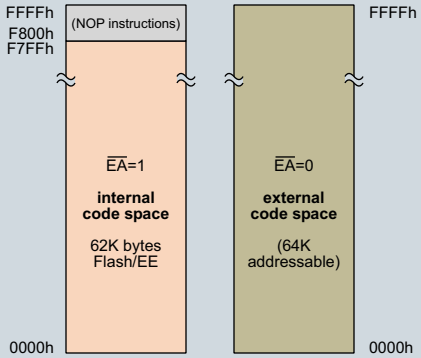

INTERRUPT VECTOR ADDRESSES

Interrupt Bit	Interrupt Name	Vector Address	Priority within Level
PSMCON.5	Power Supply Monitor Interrupt	43h	1
WDS	WatchDog Timer Interrupt	5Bh	2
IE0	External Interrupt 0	03h	3
RDY0/RDY1	End of ADC Conversion Interrupt	33h	4
TF0	Timer0 Overflow Interrupt	0Bh	5
IE1	External Interrupt 1	13h	6
TF1	Timer1 Overflow Interrupt	1Bh	7
ISPI/I2CI	SPI/I2C Interrupt	3Bh	8
RI/TI	UART Interrupt	23h	9
TF2/EXF2	Timer2 Interrupt	2Bh	10
TIMECON.2	Time Interval Counter Interrupt	53h	11

PRINTED IN U.S.A.

DATA MEMORY: RAM, SFRs, user Flash/EE (all read/write)

LOWER RAM

decimal address	HEX address		MSB address				(bit addresses)			LSB address
127	7Fh	General Purpose Area								
...	...									
48	30h									
47	2Fh	Bit Addressable Area	7Fh	7Eh	7Dh	7Ch	7Bh	7Ah	79h	78h
46	2Eh		77h	76h	75h	74h	73h	72h	71h	70h
45	2Dh		6Fh	6Eh	6Dh	6Ch	6Bh	6Ah	69h	68h
44	2Ch		67h	66h	65h	64h	63h	62h	61h	60h
43	2Bh		5Fh	5Eh	5Dh	5Ch	5Bh	5Ah	59h	58h
42	2Ah		57h	56h	55h	54h	53h	52h	51h	50h
41	29h		4Fh	4Eh	4Dh	4Ch	4Bh	4Ah	49h	48h
40	28h		47h	46h	45h	44h	43h	42h	41h	40h
39	27h		3Fh	3Eh	3Dh	3Ch	3Bh	3Ah	39h	38h
38	26h		37h	36h	35h	34h	33h	32h	31h	30h
37	25h		2Fh	2Eh	2Dh	2Ch	2Bh	2Ah	29h	28h
36	24h		27h	26h	25h	24h	23h	22g	21h	20h
35	23h		1Fh	1Eh	1Dh	1Ch	1Bh	1Ah	19h	18h
34	22h		17h	16h	15h	14h	13h	12h	11g	10h
33	21h		0Fh	0Eh	0Dh	0Ch	0Bh	0Ah	09h	08h
32	20h		07h	06h	05h	04h	03h	02h	01h	00h
31	1Fh	R7	Register Bank 3							
30	1Eh	R6								
29	1Dh	R5								
28	1Ch	R4								
27	1Bh	R3								
26	1Ah	R2								
25	19h	R1								
24	18h	R0								
23	17h	R7	Register Bank 2							
22	16h	R6								
21	15h	R5								
20	14h	R4								
19	13h	R3								
18	12h	R2								
17	11h	R1								
16	10h	R0								
15	0Fh	R7	Register Bank 1							
14	0Eh	R6								
13	0Dh	R5								
12	0Ch	R4								
11	0Bh	R3								
10	0Ah	R2								
9	09h	R1								
8	08h	R0								
7	07h	R7	Register Bank 0							
6	06h	R6								
5	05h	R5								
4	04h	R4								
3	03h	R3								
2	02h	R2								
1	01h	R1								
0	00h	R0								

lower RAM details

DATA MEMORY SPACE
(read/write area)

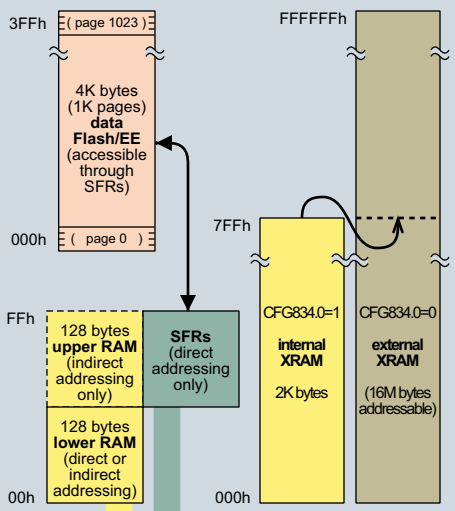

SFR details

SFR MAP & RESET VALUES

(reserved)	SPIDAT F7h 00h	(reserved)	(reserved)	PSMCON DFh DEh	PLLCON D7h 03h	(reserved)	EADRH C6h 00h	EDATA4 BFh 00h	SPH B7h 00h	CFG834 AFh 00h	DPCON A7h 00h	(reserved)	(reserved)	(reserved)	PCON 87h 00h
(reserved)	(reserved)	(reserved)	(reserved)	(reserved)	(reserved)	(reserved)	EADRL C6h 00h	EDATA3 BEh 00h	(reserved)	PWMCON AEh 00h	INTVAL A6h 00h	T3CON 9Eh 00h	(reserved)	(reserved)	(reserved)
DACCON FDh 00h	(reserved)	GN1H* ~59h EDh	OF1H E5h 80h	ADC1H DDh 00h	ICON D5h 00h	TH2 CDh 00h	(reserved)	EDATA2 BDh 00h	(reserved)	HOUR A5h 00h	T3FD 9Dh 00h	(reserved)	TH1 8Dh 00h	(reserved)
DACH FCh 00h	(reserved)	GN1L* ~9Ah ECh	OF1L E4h 00h	ADC1L DCh 00h	SF D4h 45h	TL2 CCh 00h	(reserved)	EDATA1 BCh 00h	PWM1H B4h 00h	(reserved)	MIN A4h 00h	(not used)	TH0 8Ch 00h	DPP 84h 00h
DACL FBh 00h	(not used)	GN0H* ~53h EBh	OF0H E3h 80h	ADC0H DBh 00h	ADC1CON D3h 00h	RCAP2H CBh 00h	(reserved)	PWM1L B3h 00h	(reserved)	SEC A3h 00h	I2CADD 98h 55h	(reserved)	TL1 8Bh 00h	DPH 83h 00h
(reserved)	(reserved)	GN0M* ~55h EAh	OF0M E2h 00h	ADC0M DAh 00h	ADC0CON D2h 07h	RCAP2L CAh 00h	CHIPID C2h 2Xh	PWM0H B2h 00h	(reserved)	HTHSEC A2h 00h	I2CDAT 9Ah 00h	(reserved)	TL0 8Ah 00h	DPL 82h 00h
(reserved)	(reserved)	GN0L* ~55h E9h	OF0L E1h 00h	ADC0L D9h 00h	ADCMODE D1h 00h	(reserved)	ECON B9h 00h	PWM0L B1h 00h	IEIP2 A9h A0h	TIMECON A1h 00h	SBUF 99h 00h	SCON 98h 00h	TMOD 89h 00h	SP 81h 07h
SPICON F8h 04h	B F0h 00h	I2CCON E8h 00h	ACC E0h 00h	ADCSTAT D8h 00h	PSW D0h 00h	T2CON C8h 00h	WDCON C0h 10h	IP B8h 00h	P3 B0h FFh	IE A8h 00h	P2 A0h FFh	SCON 98h 00h	P1 90h FFh	TCON 88h 00h	P0 80h FFh
SPR0 F9h 0	0	I2CI E9h 0	0	D8h 0	P D0h 0	CAP2 C9h 0	WDWR C0h 0	PX0 B9h 0	RXD B0h 1	EX0 A9h 0	1	RI 99h 0	T2 91h 1	IT0 89h 0	1
SPR1 F9h 0	0	I2CTX E9h 0	0	D9h 0	F1 D1h 0	CNT2 C9h 0	WDE C1h 0	PT0 B9h 0	TXD B1h 1	ET0 A9h 0	1	TI 99h 0	T2EX 91h 1	IE0 89h 0	1
CPHA FAh 1	0	I2CRS EAh 0	ERR1 DAh 0	OV D2h 0	TR2 CAh 0	WDS C2h 0	PX1 BAh 0	INT0 B2h 1	EX1 AAh 0	1	RB8 9Ah 0	1	IT1 8Ah 0	1
CPOL FBh 0	0	I2CM EBh 0	ERR0 DBh 0	RS0 D3h 0	EXEN2 CBh 0	WDIR C3h 0	PT1 BBh 0	INT1 B3h 1	ET1 ABh 0	1	TB8 9Bh 0	1	IE1 8Bh 0	1
SPIM FCh 0	0	MDI ECh 0	NOXREF DCh 0	RS1 D4h 0	TCLK CCh 0	PRE0 C4h 0	PS BCh 0	T0 B4h 1	ES ACh 0	1	REN 9Ch 0	1	TR0 8Ch 0	1
SPE FDh 0	0	MCO EDh 0	CAL DDh 0	F0 D5h 0	RCLK CDh 0	PRE1 C5h 0	PT2 BDh 0	ET2 ADh 0	1	SM2 9Dh 0	1	SM1 9Eh 0	1	TF0 8Dh 0	1
WCOL FEh 0	0	MDE EEh 0	RDY1 DEh 0	AC D6h 0	EXF2 CEh 0	PRE2 C6h 0	PADC BEh 0	WR B6h 1	EADC AEh 0	1	SM0 9Fh 0	1	TR1 8Eh 0	1
ISPI FFh 0	0	MDO EFh 0	RDY0 DFh 0	CY D7h 0	TF2 CFh 0	PRE3 C7h 0	RD B7h 1	EA AFh 0	1	SM1 9Fh 0	1	TF1 8Fh 0	1

MAP KEY: mnemonic, address, reset value — these bits (SPR1, SPR0) are contained in this byte (SPICON)

* calibration coefficients are preconfigured at power-up to factory calibrated values

SFR DESCRIPTIONS

ADCSTAT ADC Status Register
- RDY0 primary ADC ready flag
- RDY1 auxiliary ADC ready flag
- CAL calibration flag
- NOXREF no external reference flag
- ERR0 primary ADC error flag
- ERR1 auxiliary ADC error flag

ADCMODE ADC Mode Register
- ADMODE.5 primary ADC enable bit
- ADMODE.4 auxiliary ADC enable bit
- ADMODE.2 mode bits
- ADMODE.1 [powerdown, idle, sngl-conv, cont-conv,
- ADMODE.0 zero-selfcal, fs-selfcal, zero-syscal, fs-syscal]

ADC0CON Primary ADC Control Register
- AD0CON.7 (this bit must contain zero)
- AD0CON.6 external reference select bit (0=internal ref)
- AD0CON.5 channel selection bits:
- AD0CON.4 [AIN1-AIN2,AIN3-AIN4,AIN2-AIN2,AIN3-AIN2]
- AD0CON.3 unipolar select bit (0=bipolar)
- AD0CON.2 range select bits:
- AD0CON.1 [±20mV, ±40mV, ±80mV, ±160mV, ±320mV,
- AD0CON.0 ±640mV, ±1.28V, ±2.56V]

ADC1CON Auxiliary ADC Control Register
- AD1CON.6 external reference select bit (0=internal ref)
- AD1CON.5 channel selection bits:
- AD1CON.4 [AIN3, AIN4, TEMP, AIN5]
- AD1CON.3 unipolar select bit (0 = bipolar)

SF Sync Filter Register: f_{ADC} = 4,096Hz / (3·SF)

OF0H,OF0M,OF0L ADC0 offset coefficient

OF1H,OF1L ADC1 offset coefficient

GN0H,GN0M,GN0L ADC0 gain coefficient

GN1H,GN1L ADC1 gain coefficient

ADC0H,ADC0M,ADC0L ADC0 data

ADC1H,ADC1L ADC1 data

ICON Current Source Control Register
- ICON.6 burnout current enable bit
- ICON.5 ADC1 current correction bit (0=correction off)
- ICON.4 ADC0 current correction bit (0=correction off)
- ICON.3 I2 pin select bit [0=pin4 / 1=pin3]
- ICON.2 I1 pin select bit [0=pin3 / 1=pin4]
- ICON.1 I2 enable bit (0=disable)
- ICON.0 I1 enable bit (0=disable)

DACCON DAC Control register
- DACCON.4 DAC pin select bit [0=pin3 / 1=pin12]
- DACCON.3 ModeSelect (0=12bit, 1=8bit)
- DACCON.2 RangeSelect (0=2.5V, 1=AV_{DD})
- DACCON.1 Clear DAC (0=0V, 1=normal operation)
- DACCON.0 PowerDown DAC (0=off, 1=on)

DACH,DACL DAC data registers

PLLCON PLL Control Register
- PLLCON.7 oscillator powerdown control bit (0=XTAL on)
- PLLCON.6 PLL lock indicator flag (0=out of lock)
- PLLCON.5 (this bit must contain zero)
- PLLCON.4 EA debt status bit (reflects state of EA pin)
- PLLCON.3 "fast interrupt" control bit (0=normal)
- PLLCON.2 3-bit clock divider value, "CD" (default=3):
- PLLCON.1 f_{CORE} = 12,582,912Hz / 2^{CD}
- PLLCON.0

TIMECON Time Interval Counter Control Register
- TIMECON.6 (this bit must contain 1)
- TIMECON.5 interval timebase select bits
- TIMECON.4 [128th sec, seconds, minutes, hours]
- TIMECON.3 single time interval control bit (0=reload&restart)
- TIMECON.2 time interval interrupt bit, "TII"
- TIMECON.1 time interval enable bit (0=disable&clear)
- TIMECON.0 time clock enable bit (0=disable)

INTVAL TIC Interval Register

HTHSEC TIC Elapsed 128th Second Register

SEC TIC Elapsed Seconds Register

MIN TIC Elapsed Minutes Register

HOUR TIC Elapsed Hours Register

ECON Data Flash/EE comand register

01h	READ page	82h	PROGRAM byte
02h	PROGRAM page	0Fh	EXIT ULOAD mode
04h	VERIFY page	F0h	ENTER ULOAD mode
05h	ERASE page	(all others reserved)	
06h	ERASE ALL		

EADRH,EADRL Data Flash/EE address registers

EDATA1,EDATA2,EDATA3,EDATA4 Data Flash/EE data registers

SPICON SPI Control register
- ISPI SPI inturrupt (set at end of SPI transfer)
- WCOL write collision error flag
- SPE SPI enable (0=I2C enable, 1=SPI enable)
- SPIM master mode select (0=slave)
- CPOL clock polarity select (0=SCLK idles low)
- CPHA clock phase select (0=leading edge latch)
- SPR1 SPI bitrate select bits
- SPR0 bitrate = F_{CORE} / [2, 4, 8, 16]

SPIDAT SPI Data register

I2CCON I2C Control register
- MDO master mode SDATA output bit
- MDE master mode SDATA output enable (0=disable)
- MCO master mode SCLK output bit
- MDI master mode SDATA input bit
- I2CM master mode select bit (0=slave mode)
- I2CRS serial port reset
- I2CTX transmission direction status (0=RX,1=TX)
- I2CI serial interface interrupt

I2CADD I2C Address register

I2CDAT I2C Data register

PWMCON PWM Control register
- PWMCON.6 PWM mode bits [0=disabled, 1=single/var.res.,
- PWMCON.5 2=twin/8bit, 3=twin/16bit, 4=dual/16bitNRZ,
- PWMCON.4 5=dual/8bit, 6=dual/16bitRZ, 7=(reserved)]
- PWMCON.3 PWM clock divide bits
- PWMCON.2 PWM counter = clock / [1,4,16,64]
- PWMCON.1 PWM clock source bits [1=F_{XTAL}/15, 2=F_{XTAL},
- PWMCON.0 3=external input, 4=F_{VCO}(12.58MHz)]

PWM0H,PWM0L PWM0 data registers

PWM1H,PWM1L PWM1 data registers

T3CON Timer 3 Control register
- T3CON.7 Timer 3 baud rate enable (0=disable)
- T3CON.2 binary divide factor (DIV)
- T3CON.1 DIV = log[F_{CORE}/(32·baudrate)] / log2
- T3CON.0 (rounded down)

T3FD Timer 3 Fractional Divider register

T3FD = (2·F_{CORE}) / (baudrate·2^{Div}) - 64

CFG834 ADuC834 Configuration register
- CFG834.7 extended stack pointer enable (0=disable)
- CFG834.0 internal XRAM enable (0=external XRAM only)
- all others (reserved)

CHIPID Chip ID Register (2X hex = ADuC834)

DPCON Data Pointer Control register
- DPCON.6 data pointer auto-toggle enable (0=disable)
- DPCON.5 shadow data pointer mode control bits
- DPCON.4 [1=8052, 2=post-inc, 3=post-dec, 4=LSBtgl]
- DPCON.3 main data pointer mode control bits
- DPCON.2 [1=8052, 2=post-inc, 3=post-dec, 4=LSBtgl]
- DPCON.1 (not implemented to allow INC DPCON toggling)
- DPCON.0 data pointer select [0=main, 1=shadow]

WDCON Watchdog Timer control register
- PRE3 watchdog timeout selection bits
- PRE2 0000-0111 = timeout=[15.6, 31.2, 62.5, 125, 500
- PRE1 1000 = immediate reset 1000, 2000] ms
- PRE0 all others codes = reserved
- WDIR watchdog interrupt response enable
- WDS watchdog status flag
- WDE watchdog enable
- WDWR write enable

PSMCON Power Supply Monitor control register
- PSMCON.7 DV_{DD} compare bit (0=fault)
- PSMCON.6 AV_{DD} compare bit (0=fault)
- PSMCON.5 PSM interrupt bit
- PSMCON.4 DV_{DD} trip point select bits
- PSMCON.3 [4.63V, 3.08V, 2.93V, 2.63V]
- PSMCON.2 AV_{DD} trip point select bits
- PSMCON.1 [4.63V, 3.08V, 2.93V, 2.63V]
- PSMCON.0 PSM powerdown control (1=on / 0=off)

SP Stack Pointer

SPH Stack Pointer High byte

IE Interrupt Enable register #1
- EA enable inturrupts (0=all inturrupts disabled)
- EADC enable RDY0/RDY1 (ADC interrupt)
- ET2 enable TF2/EXF2 (Timer2 overflow interrupt)
- ES enable RI/TI (serial port interrupt)
- ET1 enable TF1 (Timer1 overflow interrupt)
- EX1 enable IE1 (external interrupt 1)
- ET0 enable TF0 (Timer0 overflow interrupt)
- EX0 enable IE0 (external interrupt 0)

IEIP2 Interrupt Enable/Priority register #2
- IEIP2.6 priority of TII interrupt (timer interval)
- IEIP2.5 priority of PSMI interrupt (power supply monitor)
- IEIP2.4 priority of ISPI/I2CI interrupt (serial interface)
- IEIP2.3 (this bit must contain zero)
- IEIP2.2 enable TII interrupt (timer interval)
- IEIP2.1 enable PSMI interrupt (power supply monitor)
- IEIP2.0 enable ISPI/I2CI interrupt (serial interface)

IP Interrupt Priority register
- PADC priority of RDY0/RDY1 (ADC interrupt)
- PT2 priority of TF2/EXF2 (Timer2 overflow interrupt)
- PS priority of RI/TI (serial port interrupt)
- PT1 priority of TF1 (Timer1 overflow interrupt)
- PX1 priority of IE1 (external interrupt 1)
- PT0 priority of TF0 (Timer0 overflow interrupt)
- PX0 priority of IE0 (external interrupt 0)

TMOD Timer Mode register
- TMOD.3/.7 gate control bit (0=ignore INTx)
- TMOD.2/.6 counter/timer select bit (0=timer)
- TMOD.1/.5 timer mode selecton bits
- TMOD.0/.4 [13bitT, 16bitT/C, 8bitT/Creload, 2x8bitT]
- (upper nibble = Timer1, lower nibble = Timer0)

TCON Timer Control register
- TF1 Timer1 overflow flag
- TR1 Timer1 run control (0=off, 1=run)
- TF0 Timer0 overflow flag
- TR0 Timer0 run control (0=off, 1=run)
- IE1 external INT1 flag
- IT1 IE1 type (0=level trig, 1=edge trig)
- IE0 external INT0 flag
- IT0 IE0 type (0=level trig, 1=edge trig)

TH0,TL0 Timer0 registers

TH1,TL1 Timer1 registers

T2CON Timer2 Control register
- TF2 overflow flag
- EXF2 external flag
- RCLK receive clock enable (0=Timer1 used for RxD clk)
- TCLK transmit clock enable (0=Timer1 used for TxD clk)
- EXEN2 external enable (0=ignore T2EX, 1=capr/rld on T2EX)
- TR2 run control (0=stop, 1=run)
- CNT2 timer/counter select (0=timer, 1=counter)
- CAP2 capture/reload select (0=reload, 1=capture)

TH2,TL2 Timer2 register

RCAP2H,RCAP2L Timer2 Reload/Capture

P0 Port0 register (also A0-A7 & D0-D7)

P1 Port1 register
- P1.2-1.7 analog/digital pins (1=analog function, 0=digital input)
- T2EX timer/counter 2 capture/reload trigger (or digital I/O)
- T2 timer/counter 2 external input (or digital I/O)

P2 Port2 register (also A8-A15 & A16-A23)

P3 Port3 register
- RD external data memory read strobe
- WR external data memory write strobe
- T1 timer/counter 1 external input
- T0 timer/counter 0 external input
- INT1 external interrupt 1
- INT0 external interrupt 0
- TxD serial port transmit data line
- RxD serial port receive data line

SCON Serial communications Control register

SM0	UART mode control bits	baud rate:
SM1	00 - 8bit shift register	- F_{CORE}/12
	01 - 8bit UART	- variable
	10 - 9bit UART	- F_{CORE}/64(x2)
	11 - 9bit UART	- variable

- SM2 in modes 2&3, enables multiprocessor communication
- REN receive enable control bit
- TB8 in modes 2&3, 9th bit transmitted
- RB8 in modes 2&3, 9th bit received
- TI transmit interrupt flag
- RI receive interrupt flag

SBUF Serial port Buffer register

PCON Power Control register
- PCON.7 double baud rate control
- PCON.6 enable serial interrupt (tSI) from power-down mode
- PCON.5 enable interrupt 0 (INT0) from power-down mode
- PCON.4 ALE disable (0=normal, 1=forces ALE high)
- PCON.3 general purpose flag
- PCON.2 general purpose flag
- PCON.1 power-down control bit (0=normal)
- PCON.0 idle-mode control (0=normal)

PSW Program Status Word
- CY carry flag
- AC auxiliary carry flag
- F0 general purpose flag 0
- RS1 register bank select control bits
- RS0 active register bank = [0,1,2,3]
- OV overflow flag
- F1 general purpose flag 1
- P parity of ACC

DPP Data Pointer Page

DPH,DPL (DPTR) Data Pointer

ACC Accumulator

B auxiliary math register